Deniz Akyıldız

FRESH and SALTED WATER

Pro Evolution Science
Team of Turkey

Problem

* Electroconductivity of natural water depends on concentration of dissolved salts.
* What might be the source of water with 13.2 µS/cm conductivity?

At the tournament you will be provided by a sample of water. Measure the electroconductivity of the new sample. Decide whether it is distilled water, tap water or mineral water.

The Work Plan

* Give an explanation of conductivity
* Find the relation between the conductivity and dissolved concentration.
* Explain these relations

Conductivity

* Is a measure of ability to conduct electricity.
* The unit is Siemens per meter (S/m) in SI unit system.
* It is related to the ions dissolved in liquid.

$$\sigma = \frac{1}{\rho}$$

σ is conductivity

ρ is resistivity

Scheme of Experimental Setup

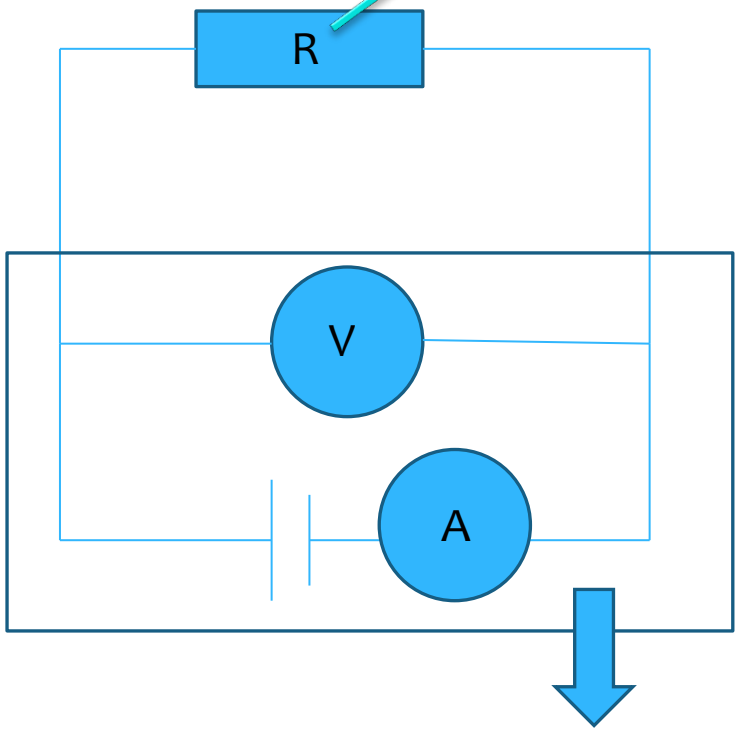

Multimeter

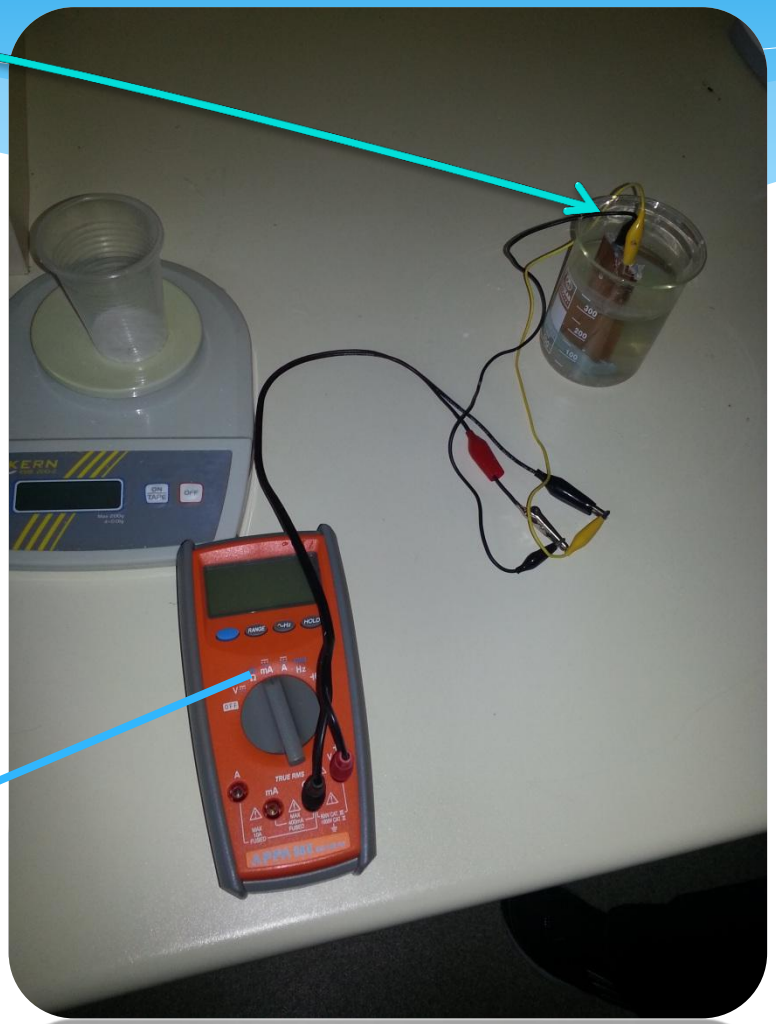

A Closer View

Solution

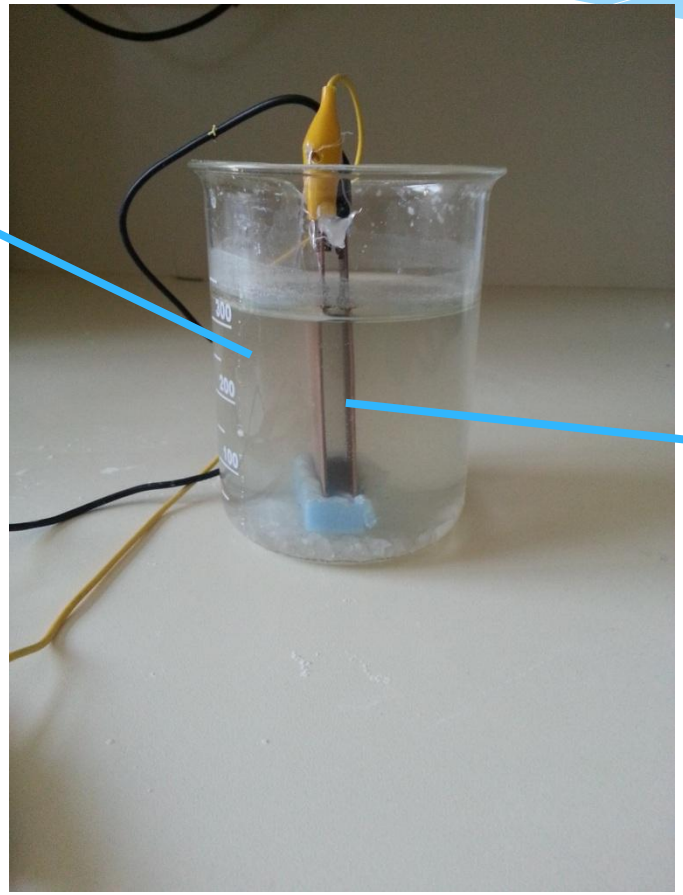

Copper plates

The Motion of the Ions

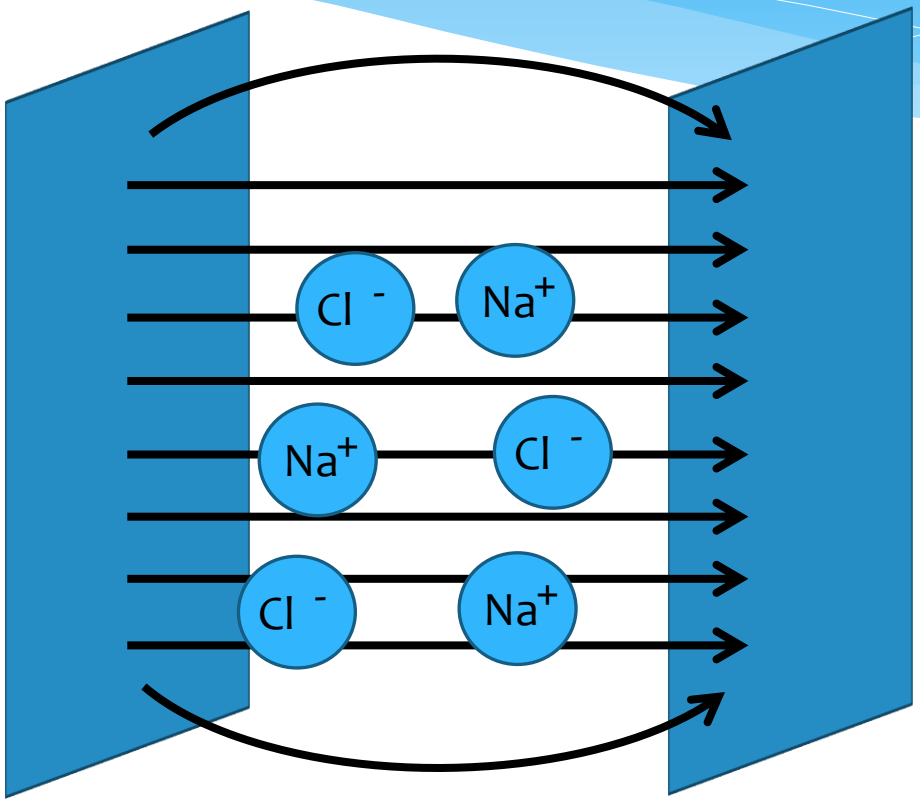

$$\ell << S$$

THEORITICAL MODEL

Ohm's Law

$$j = E\sigma$$

Current

$$I = jS$$

Potential Difference

$$\Delta\varphi = \int E dr = E\ell$$

Conductivity

$$\boxed{\sigma = \frac{\ell}{SR}}$$

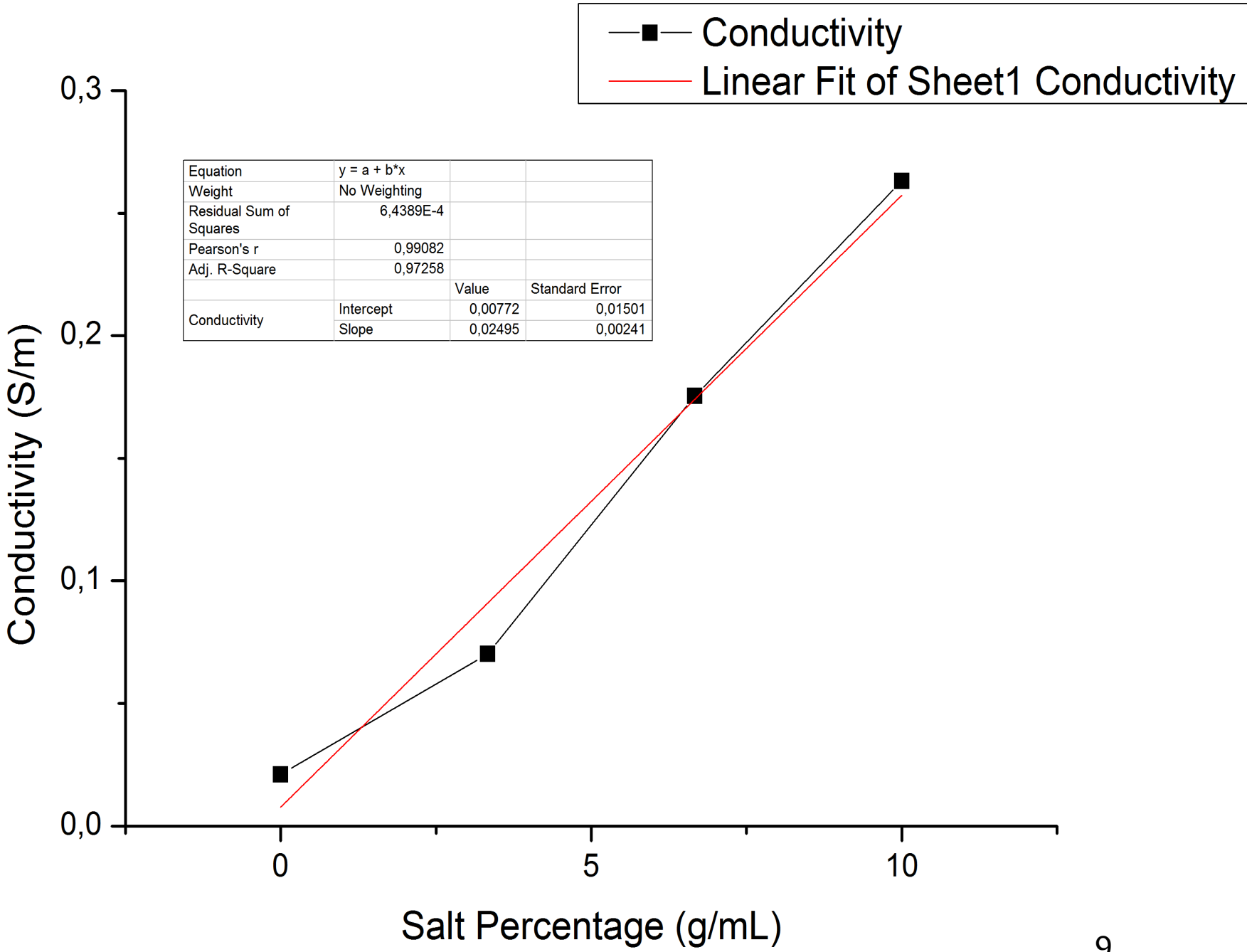
Conductivity
Linear Fit of Sheet1 Conductivity
Equation | y = a + b*x
Weight | No Weighting
Residual Sum of Squares | 6,4389E-4
Pearson's r | 0,99082
Adj. R-Square | 0,97258
Value | Standard Error
Conductivity | Intercept | 0,00772 | 0,01501
Slope | 0,02495 | 0,00241
0,3
0,2
0,1
0,0
Conductivity (S/m)
0
5
10
Salt Percentage (g/mL)

THEORITICAL MODEL

$$j = \alpha n v e (b^{+} + b^{-}) E$$

$$j = E\sigma$$

$$\frac{\sigma}{n} = \alpha v e (b^{+} + b^{-})$$

Here n is concentration

b , α and ν are constants related to solution.

And this ratio is equal to slope of our salinity-conductivity graph

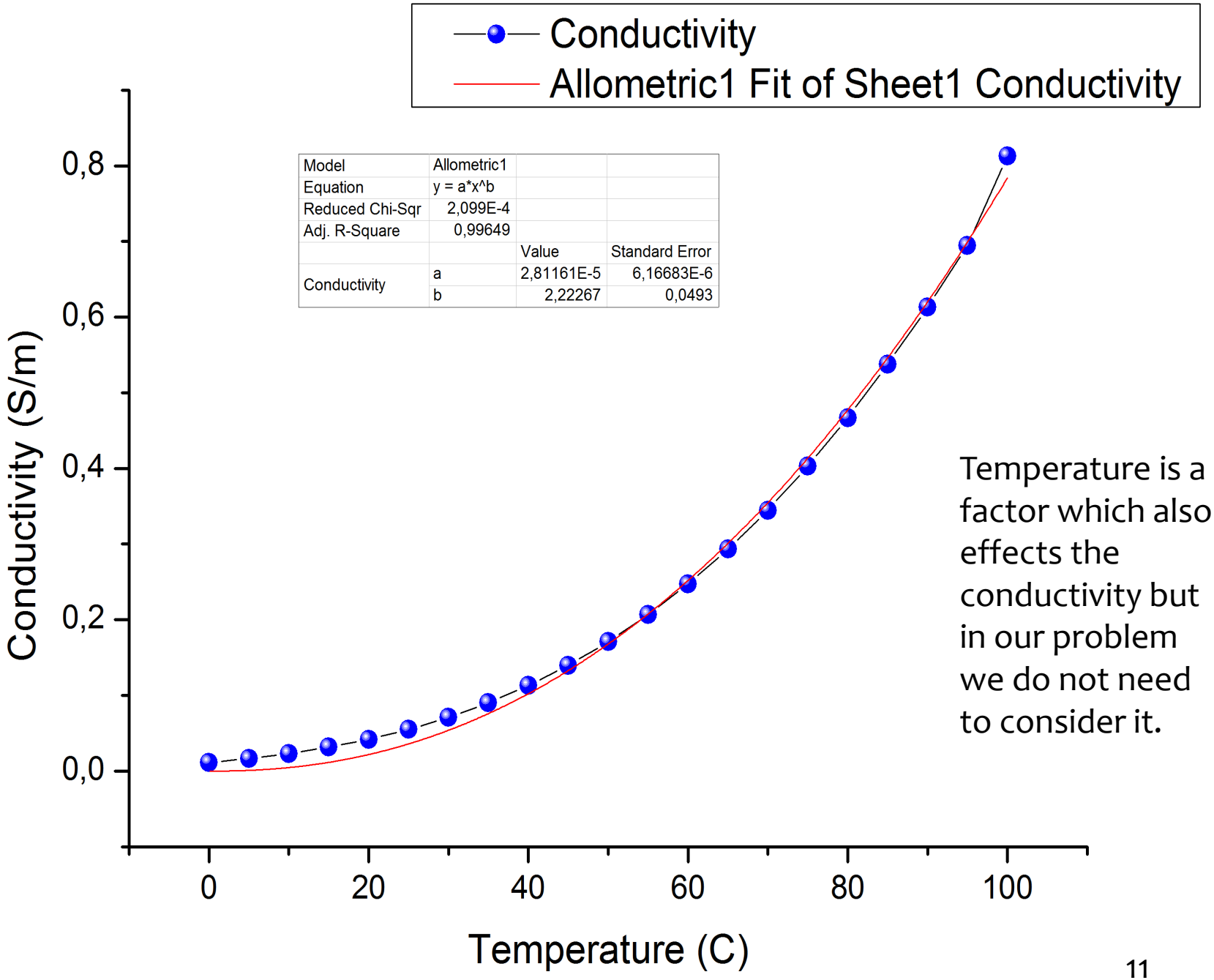

Model	Allometric1		
Equation	y = a*x^b		
Reduced Chi-Sqr	2,099E-4		
Adj. R-Square	0,99649		
		Value	Standard Error
Conductivity	a	2,81161E-5	6,16683E-6
	b	2,22267	0,0493

Temperature is a factor which also effects the conductivity but in our problem we do not need to consider it.

Table

* Black Sea
* Dead Sea
* Baltic Sea at Neva estuary
* Lake Baikal
* Moscow-river, upstream of Moscow City (in winter)
* Peat bog lake
* Moscow-river, downstream of Moscow City (in winter)
* Possible values of the electroconductivity, µS/cm: 10; 125; 420; 580; 4580; 45600; 228000.

Sources	Possible Conductivity Values (µS/cm)	Salinity (%)
Dead Sea	228000	33-34
Black Sea	45600	18-18.5
Baltic Sea	4580	6-8
Moscow-River (downstream)	580	-
Moscow-River (upstream)	420	-
Peat Bog Lake	125	
Lake Baikal	10	0.12

13.2 µS/cm = ?

Conclusions

* Conductivity is linearly related to salinity.
* Conductivity is related to temperature exponentially.
* The type of ions' determine the conductivity.

References

* http://www.lehigh.edu/~amb4/wbi/kwardlow/conductivity.htm
* http://en.wikipedia.org/wiki/Electrical_resistivity_and_conductivity
* http://en.wikipedia.org/wiki/Conductivity_(electrolytic)
* http://www.lenntech.com/applications/ultrapure/conductivity/water-conductivity.htm
* http://www.mbhes.com/conductivity_measurement.htm
* http://en.wikipedia.org/wiki/Salinity
* http://www.fao.org/docrep/field/003/AC183E/AC183E03.htm
* http://www.ehow.com/about_6582701_conductivity-vs_-salinity.html

Thank you for your attention!