17. Atmospheric Electricity

REPORT

Greece-Pinewood
Boris Katafygiotis

Hellenic Physical Society

I.Y.N.T. - Minsk 2019

Topic

A method of detecting atmospheric electricity was investigated.

Atmospheric Electricity

- In fair weather there is a voltage between the ground and ~50 km up of around 400kV[1].
- The rate of change in voltage is not uniform with increasing height, but near the ground the voltage increases by around 100V/m.

A vertical electric field E = 100V/m exists in the air.

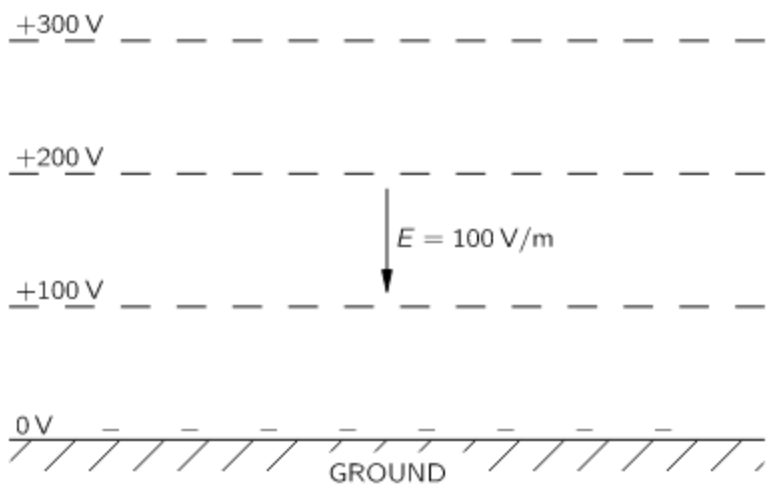

Equipotential line

The potential distribution above the earth[1].

Atmospheric Electricity

- The human body is a relatively good conductor[2].
- Conductive enough to be at ground potential (when in contact with the ground)

The equipotential lines curve around them

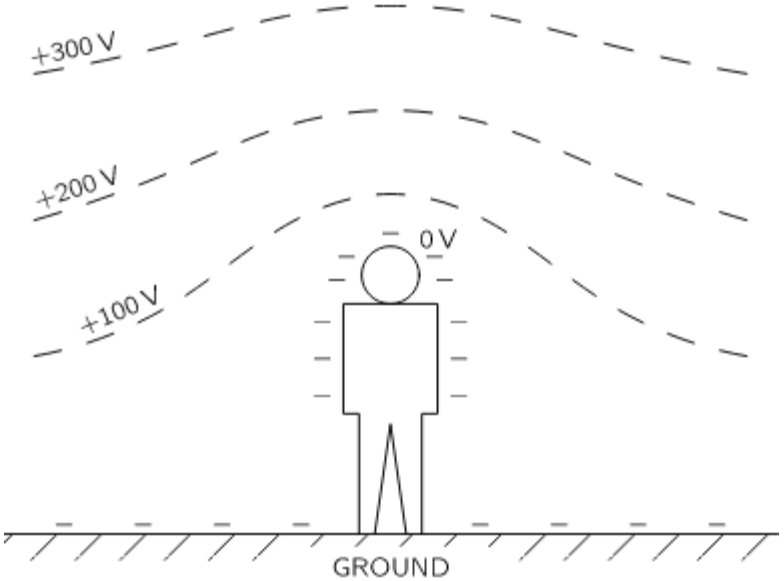

Equipotential line

The potential distribution near a man in an open flat place[1].

Atmospheric Electricity

In the ionosphere there is enough ionization of air (mainly by UV radiation) to make the atmosphere an electrically conducting layer.

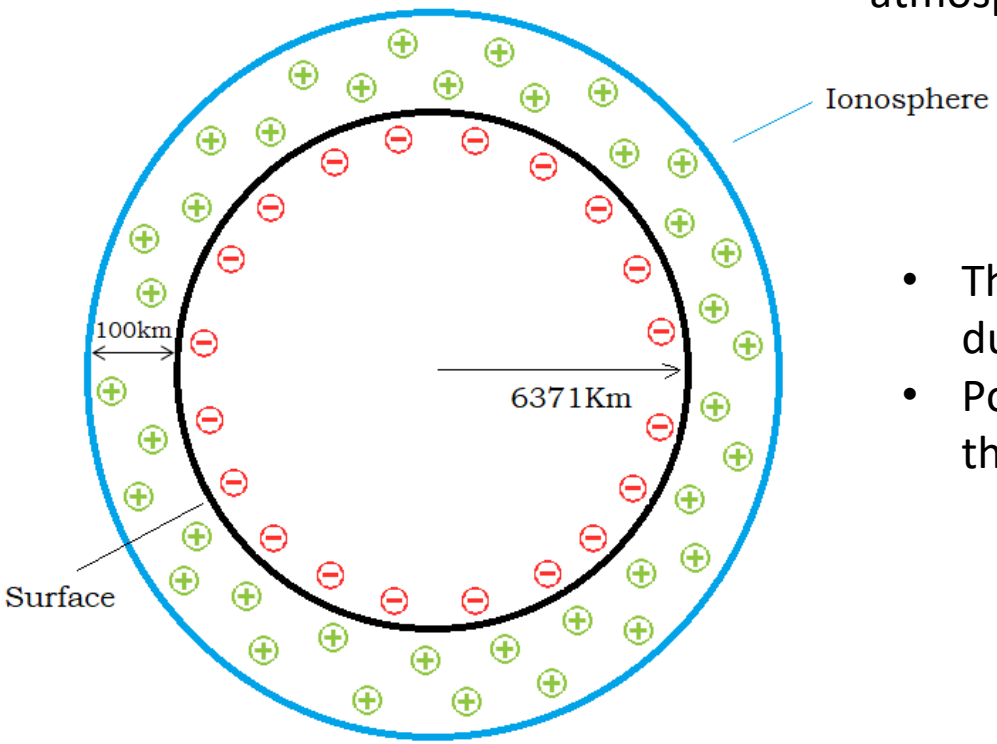

- The ground is normally negatively charged during fair weather.
- Positive charge is found in the air between the ground and the ionosphere[3].

The Earth's surface and the ionosphere resemble a charged spherical capacitor.

Experiment

Research question:
How can we measure the atmospheric electric field in fair weather?

Hypothesis:
If a copper wire that is in contact with an electrometer is lifted at a certain altitude, then electrons from the electrometer's leaves will be transferred to the copper wire and the leaves will become positive – repelling each other.

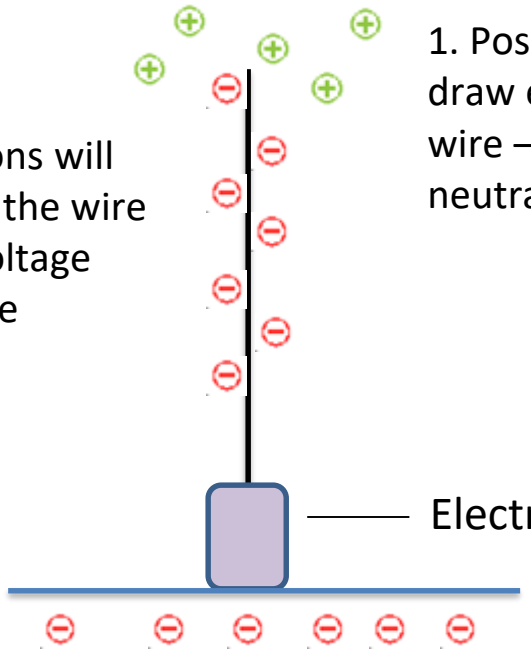

Method

1) An electrometer was constructed
   - a hole was screwed off a jar lid (width of a straw)
   - two leaves were cut from a tin foil sheet
   - a 30cm copper wire was cut
   - the two leaves were attached to one end of the copper wire
   - a circular spiral at the other end of the wire was made
   - the wire was put through the jar lid, leaving the leaf side inside the jar

2)One end of a 30m copper wire was attached to a drone.
3)The other end of the wire was in contact with an electrometer.
4)The drone took off straight up from the rooftop of our school 20m above ground
5)The electrometer was observed constantly

Results

-The electromagnet is shown to work

-Reason for this is that the leaves are shown to repel each other as it should corresponding with the theory

-Allowing us to detect the positive ions in the atmospheric electric field during fair weather

Conclusion

In conclusion we were able to detect the atmospheric electricity in fair weather using the electrometer that we created in conjunction with the drone

Bibliography

1. J.A Chalmers. Richard Feynman's Lecture on Physics, volume 2, section 9, Pergamon Press, London (1957).
2. M Fish, Raymond & A Geddes, Leslie. Conduction of Electrical Current to and Through the Human Body: A Review. Eplasty. 9. e44. (2009).
3. http://www.atmo.arizona.edu/students/courselinks/spring13/atmo589/ATMO489_online/lecture_1/lect1_global_elec_circuit.html